ACCU TECH USA

Automation and Motion Solutions

Z-Axis Plasma Torch Lifter

LCA Actuator

NEWLY RELEASED
Affordable Actuator Designed for Large Volume OEM Applications

FEATURES

- Complete assembly with protective shroud
- Size 15 linear bearings for high cantilevered loading
- Limit switch and home switches - normally open
- Ability to fit with custom clamp for flame/plasma nozzle
- Stepper motor included
- Custom lengths available
- Black powder coated cover and anodized parts to prevent corrosion
- Minimum quantity of 50 units for custom assemblies
- Temperature rating up to 185° F

PRICE: $595.00

(Quantity Discounts Available)

Stroke Length	174mm
Motor	NEMA23 Integrated Lead Screw
Max Speed	75mm/s
Lead	10mm
MOTOR SPECIFICATION	
Phase	2 phase stepper motor
Step Angle	1.8°
Rated Voltage	3.5V
Rated current/phase	2.0A
Linear travel per step	0.0254 mm/step
Nominal Screw Diameter	10mm
Load Rating	57kg, 125lbs

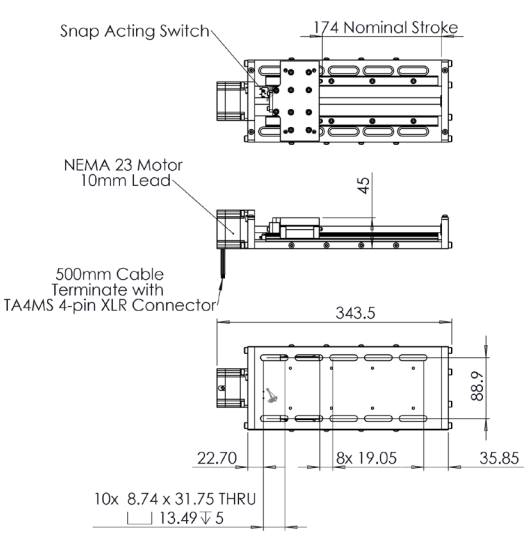

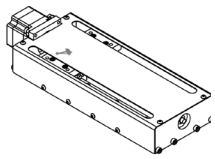

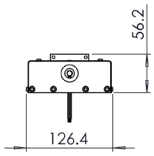

Integrated Stepper and Lead Screw Motor

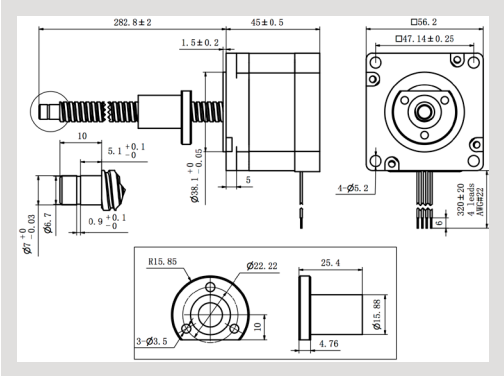

919.863.0837 sales@accu-techusa.com www.accu-techusa.com